NOTES:

1 LINE UP THE TIMING MARKS ON THE GEARS AND CHECK THE POSITION OF CRANKS SO THAT WHEN THROWS ON ONE CRANK ARE VERTICAL, THE THROWS ON THE OTHER CRANK ARE HORIZONTAL.

2 APPLY LIGHT OIL TO CONNECTING ROD BEARINGS, WRIST PINS AND CROSSHEADS.

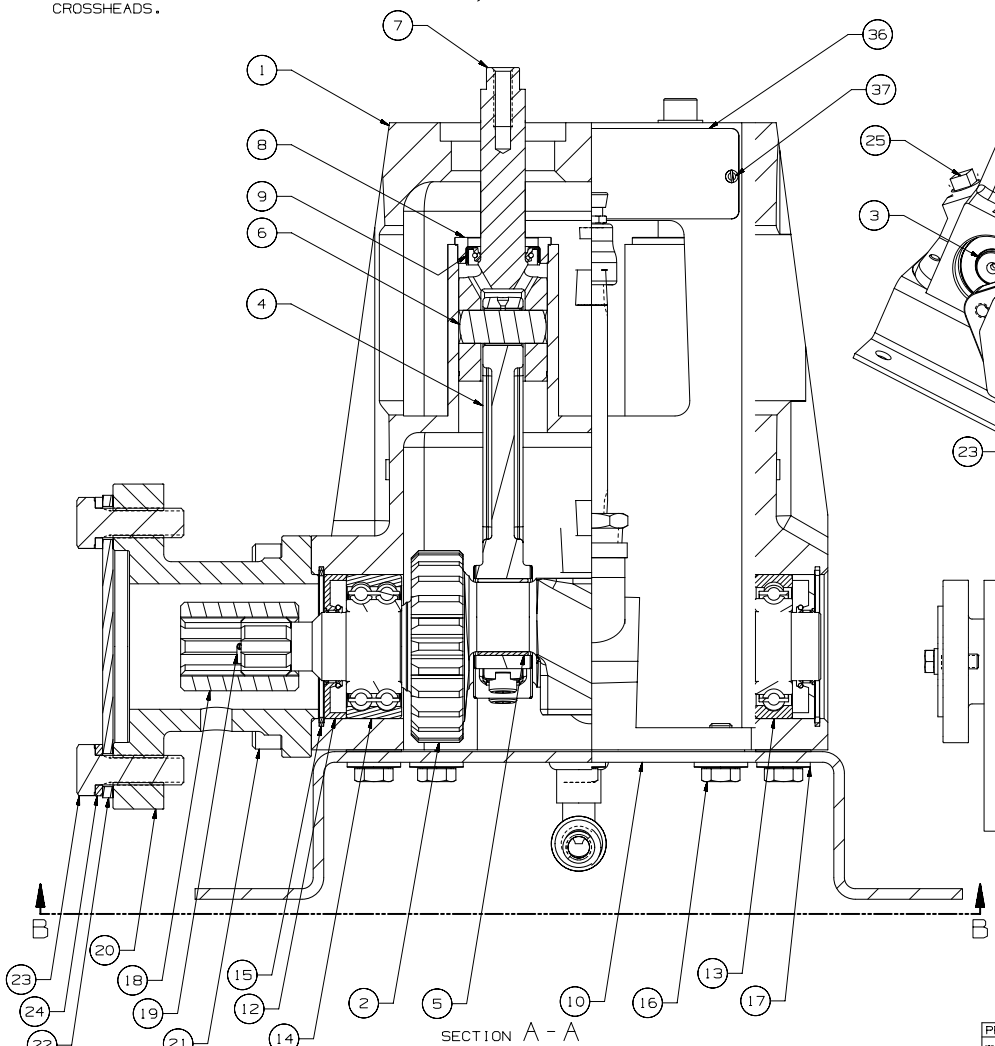

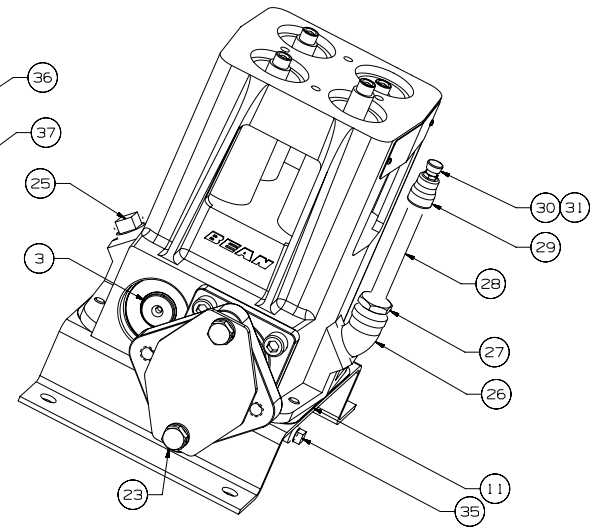

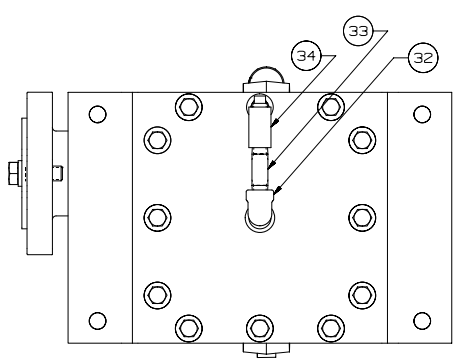

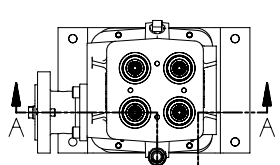

ITEM	DESCRIPTION	QTY
1	POWER FRAME:	1
2	CRANKSHAFT: E04,HEAVY DUTY, DRIVE, SAE	1
3	CRANKSHAFT: E04, HEAVY DUTY, DRIVEN	1
4	CONNECTING ROD; E04	4
5	ROD BEARING; HALF SHELL	8
6	WRIST PIN;	4
7	CROSSHEAD:	4
8	SEAL HOLDER:	4
9	SEAL: PONY ROD	4
10	MOUNTING BASE:	1
11	GASKET; BASE	1
12	OIL SEAL;	4
13	BALL BEARING: SINGLE ROW	3
14	BALL BEARING: DOUBLE ROW	1
15	RETAINING RING;	4
16	CAP SCREW: HEX HEAD, 3/8 X .75 LG	12
17	WASHER: BELLEVILLE, 3/8	12
18	COUPLING: 1" SAE 6B SPLINE	1
19	PIN, SPRING: SLOTTED	1
20	FLANGE: E04, SAE A 4-BOLT	1
21	CAP SCREW: HEX SOC HEAD, 1/2 X 1.00 LG	4
22	PROTECTIVE COVER:	1
23	CAP SCREW: HEX HEAD, 1/2 X 1.50 LG	2
24	LOCK WASHER: REGULAR, 1/2	2
25	PIPE PLUG: SQ HEAD, 3/4 NPT (NS)	1
26	STREET ELBOW: 3/4 NPT X 45 DEG	1
27	BUSHING: HEX HEAD, 3/4 X 1/8	1
28	NIPPLE: 1/4 SCH 40, 1/4 NPT	1
29	REDUCER: 1/4 NPT X 1/8 NPT	1
30	LUBE VENT: 1/8-27 PTF	1
31	PIPE PLUG: SQ HEAD, 1/8 NPT	1
32	STREET ELBOW: 1/4 NPT, FXM	1
33	NIPPLE: PIPE, 1/4 SCH 40, NPT, 2.25 LG	1
34	COUPLING: 1/4 X 1/4 NPT FEMALE	1
35	PIPE PLUG: 1/4 NPT	1
36	NAMEPLATE	1
37	SELF TAPPING SCREW:	2

PRIVATE AND CONFIDENTIAL

THIS DOCUMENT AND ALL THE INFORMATION CONTAINED HEREIN ARE THE CONFIDENTIAL AND EXCLUSIVE PROPERTY OF FMC TECHNOLOGIES AND MAY NOT BE REPRODUCED, USED, DISCLOSED, OR MADE PUBLIC IN ANY MANNER PRIOR TO EXPRESS WRITTEN AUTHORIZATION BY FMC TECHNOLOGIES. THIS DOCUMENT IS ACCEPTED PURSUANT TO AGREEMENT TO THE FOREGOING, AND MUST BE RETURNED UPON DEMAND.

MANUFACTURER AGREES THAT ARTICLES MADE IN ACCORDANCE WITH THIS DOCUMENT SHALL BE CONSIDERED FMC TECHNOLOGIES' DESIGN, AND THAT IDENTICAL ARTICLES OR PARTS THEREOF SHALL NOT BE MANUFACTURED FOR THE USE OR SALE BY MANUFACTURER OR ANY OTHER PERSON OR ENTITY WITHOUT PRIOR EXPRESS WRITTEN AUTHORIZATION BY FMC TECHNOLOGIES.

UNLESS OTHERWISE SPECIFIED

DO NOT SCALE THIS DRAWING
ALL DIMENSIONS ARE IN INCHES [MM]
BREAK SHARP EDGES .015 [.381] MAXIMUM
INSIDE CORNER RADII .030 [.762] MAXIMUM
THREADS CONFORM TO FEDERAL STANDARD H-28
TAPERED THREADS CONFORM TO API 6A
BOLT HOLES MUST STRADDLE COMMON CENTERLINE
FINISH 250 RMS

TOLERANCE
.X -- ± .030 [.762]
.XX -- ± .015 [.381]
.XXX -- ± .005 [.127]
ANGLE -- ± 30'

DESCRIPTION
POWER END ASSEMBLY: E04
HD LH OR RH, W/1 INCH
SAE 6B SPLINE &
HYDRAULIC MOTOR MOUNT,
MOUNTING FEET

DRAWN BY: KUNISHIGE, SCOTT	DATE: 19-JAN-2006	FMC Technologies
DRAFTING CHECK: KUNISHIGE, SCOTT	DATE: 19-JAN-2006	
DESIGN REVIEW: LYON, TIM	DATE: 07-MAR-2006	
MANUFACTURING APPROVAL: CHARLTON, FRED	DATE: 13-FEB-2006	LATEST REV. NO. 5015044 REV. A
APPROVED BY: HODGES, BILLY BOB	DATE: 12-APR-2006	DRAWING NUMBER 00500001843

COPYRIGHT FMC TECHNOLOGIES

** RELEASED FOR MANUFACTURE ** — Published: 08/08/2007__09:20:12