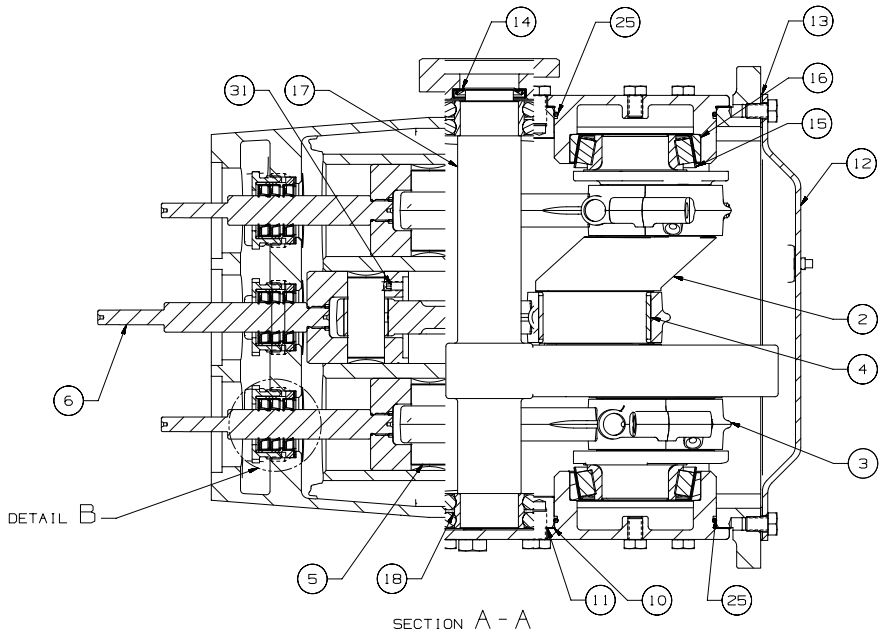

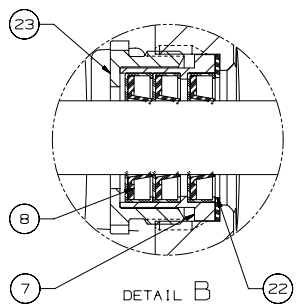

ITEM	DESCRIPTION	QTY
1	POWER FRAME: F/L11/W11 W/HYD MOTOR	1
2	CRANKSHAFT & GEAR ASSEMBLY:	1
3	CONNECTING ROD:	3
4	ROD BEARING:	6
5	WRIST PIN:	3
6	CROSSHEAD ASSEMBLY:	3
7	SEAL HOLDER:	3
8	OIL SEAL: AXIAL MOTION	9
9	BEARING HOUSING; L11	2
10	GASKET:BEARING HOUSING	2
11	SHIM; L11	6
12	BACK COVER; L11	1
13	GASKET; BACKCOVER, L11	1
14	OIL SEAL: PINION	1
15	BEARING CONE:	2
16	BEARING CUP:	2
17	14 TH PINION SHAFT	1
18	BEARING:PINION	2
19	PINION BEARING CAP:	1
20	GASKET:PINION	2
21	ADAPTER:	1
22	GASKET: PACKING NUT	3
23	PACKING NUT: WIPER SEAL	3
24	OIL CAP:	1
25	O-RING: UNIFORM #252	2
26	CAP SCREW:HEX HEAD 1/2 X .75 LG	20
27	CAP SCREW:HEX HEAD 1/2 X 1.00 LG	10
28	CAP SCREW:HEX HEAD 1/4 X .50 LG	2
29	CAP SCREW:SOC HEAD 1/2 X 1.00 LG	4
30	CAP SCREW: HEX HEAD, 5/8 X .38 LG	1
31	SET SCREW:SOC HEAD KNURLED 5/16 X 5/16L	3
32	PIPE PLUG: SQ HEAD, 1/8 NPT	1
33	PIPE PLUG: SQ HEAD, 1/2 NPT	2
34	PIPE PLUG:1-1/4 NPT (NOT SHOWN)	1
35	INSPECTION PLATE;	1
36	SELF TAPPING SCREW:	2
37	NAMEPLATE	1

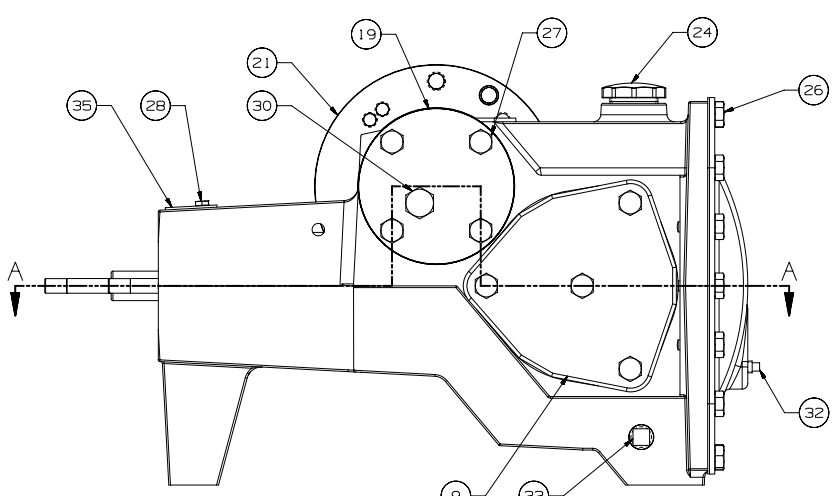

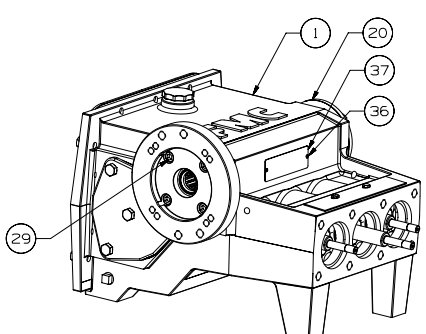

PRIVATE AND CONFIDENTIAL

THIS DOCUMENT AND ALL THE INFORMATION CONTAINED HEREIN ARE THE CONFIDENTIAL AND EXCLUSIVE PROPERTY OF FMC TECHNOLOGIES AND MAY NOT BE REPRODUCED, USED, DISCLOSED, OR MADE PUBLIC IN ANY MANNER PRIOR TO EXPRESS WRITTEN AUTHORIZATION BY FMC TECHNOLOGIES. THIS DOCUMENT IS ACCEPTED PURSUANT TO AGREEMENT TO THE FOREGOING, AND MUST BE RETURNED UPON DEMAND.

MANUFACTURER AGREES THAT ARTICLES MADE IN ACCORDANCE WITH THIS DOCUMENT SHALL BE CONSIDERED FMC TECHNOLOGIES' DESIGN, AND THAT IDENTICAL ARTICLES OR PARTS THEREOF SHALL NOT BE MANUFACTURED FOR THE USE OR SALE BY MANUFACTURER OR ANY OTHER PERSON OR ENTITY WITHOUT PRIOR EXPRESS WRITTEN AUTHORIZATION BY FMC TECHNOLOGIES.

UNLESS OTHERWISE SPECIFIED

DO NOT SCALE THIS DRAWING
ALL DIMENSIONS ARE IN INCHES [MM]
BREAK SHARP EDGES .015 [.381] MAXIMUM
INSIDE CORNER RADII .030 [.762] MAXIMUM
THREADS CONFORM TO FEDERAL STANDARD H-28
TAPERED THREADS CONFORM TO API 6A
BOLT HOLES MUST STRADDLE COMMON CENTERLINE
FINISH 250 RMS
ALL DIA'S CONCENTRIC WITHIN .010 [.254] T.I.R.

TOLERANCE
.X -- ± .030 [.762]
.XX -- ± .015 [.381]
.XXX -- ± .005 [.127]
ANGLE -- ± 30'

DESCRIPTION
POWER END ASSEMBLY: L11 LH, HYD MOTOR DRIVE

DRAWN BY:	STILES, MICHAEL	DATE:	17-OCT-2007
DRAFTING CHECK:	LOUDERMILK, STEVE	DATE:	05-NOV-2007
DESIGN REVIEW:	EVANS, AARON	DATE:	21-JAN-2008
MANUFACTURING APPROVAL:	CRUZ, GEORGE	DATE:	01-DEC-2007
APPROVED BY:	SINGLETERRY, RONALD	DATE:	23-JAN-2008

FMC Technologies

LATEST ECN NO. 5019086 REV. A

DRAWING NUMBER DU500009562

COPYRIGHT FMC TECHNOLOGIES

** RELEASED FOR MANUFACTURE ** -- Published: 01/29/2008__14:51:42