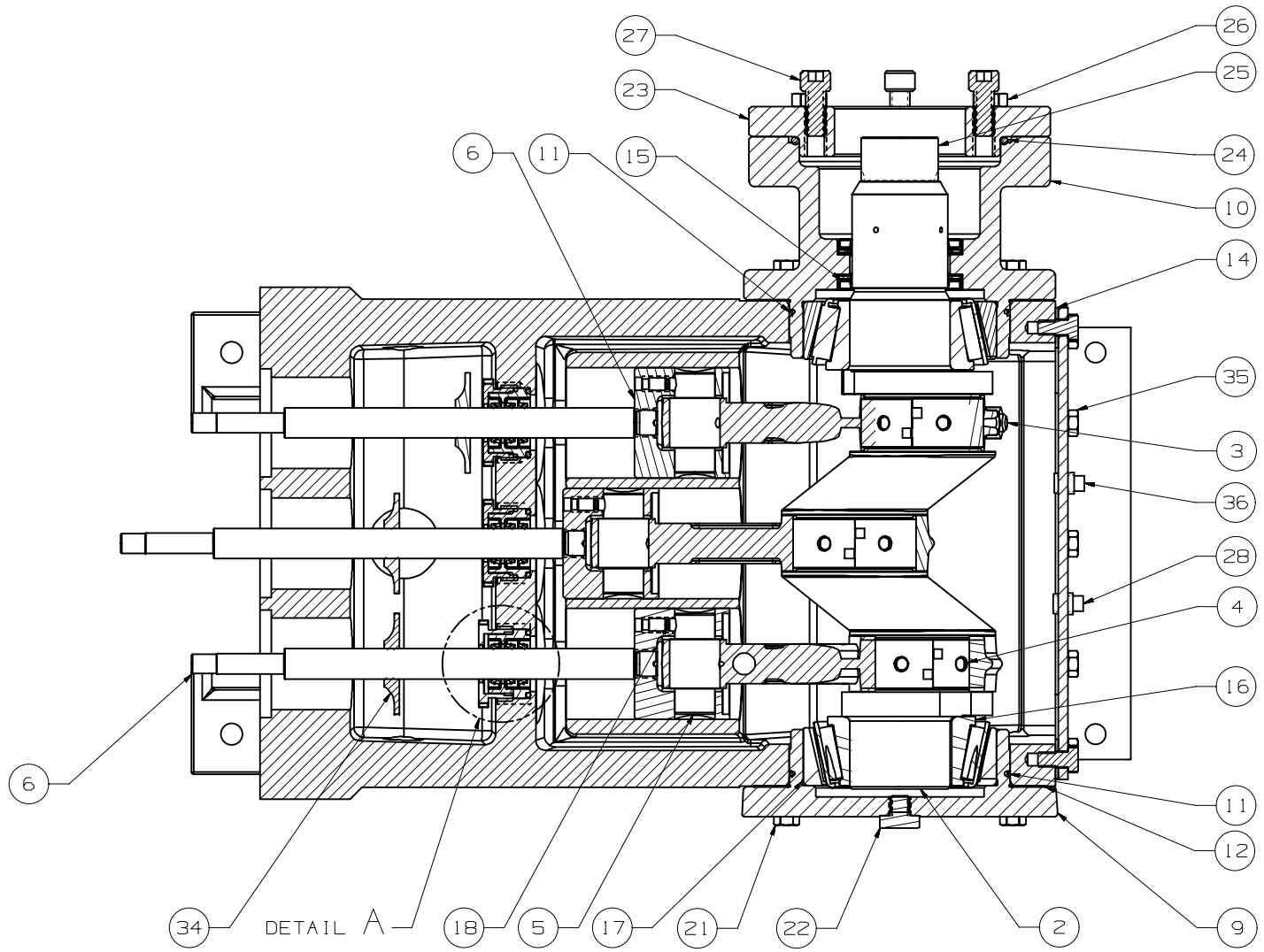

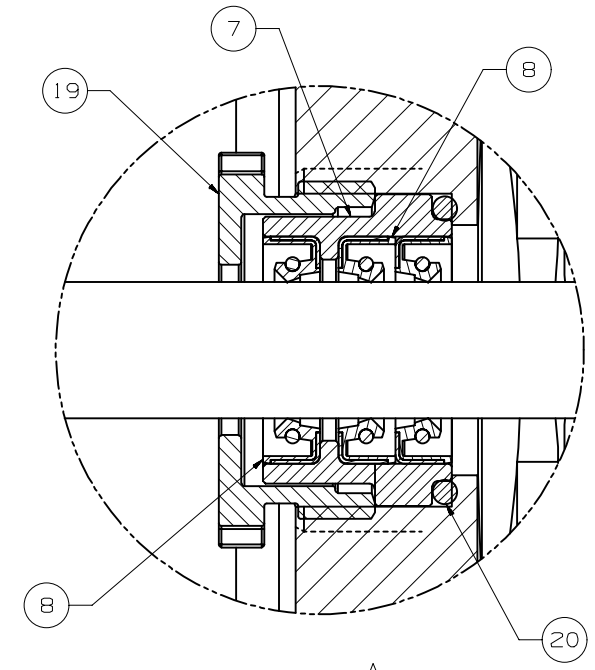

DETAIL A

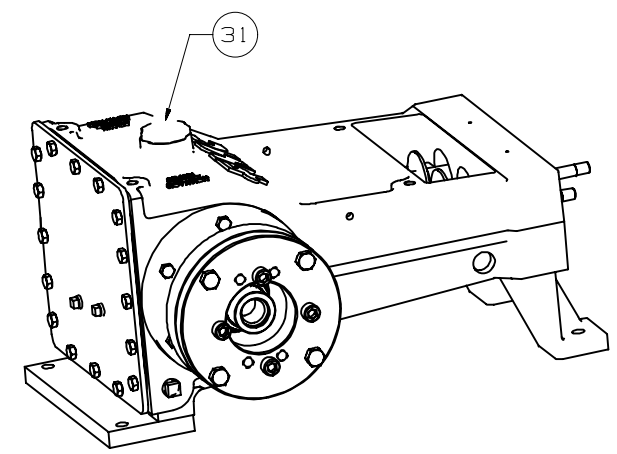

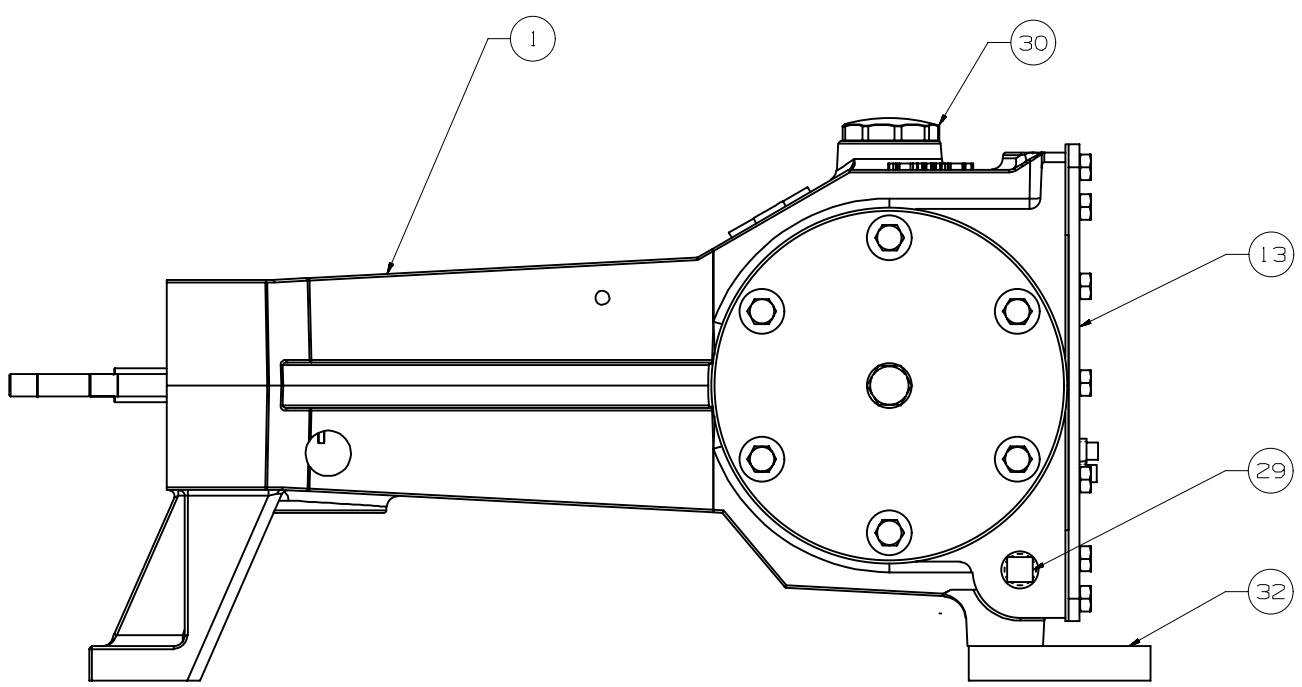

THE WEEP HOLES BETWEEN SEALS AND THE 1/4" NPT RETURN LINE CONNECTION ARE TO BE IN THE 6:00 O'CLOCK POSITION

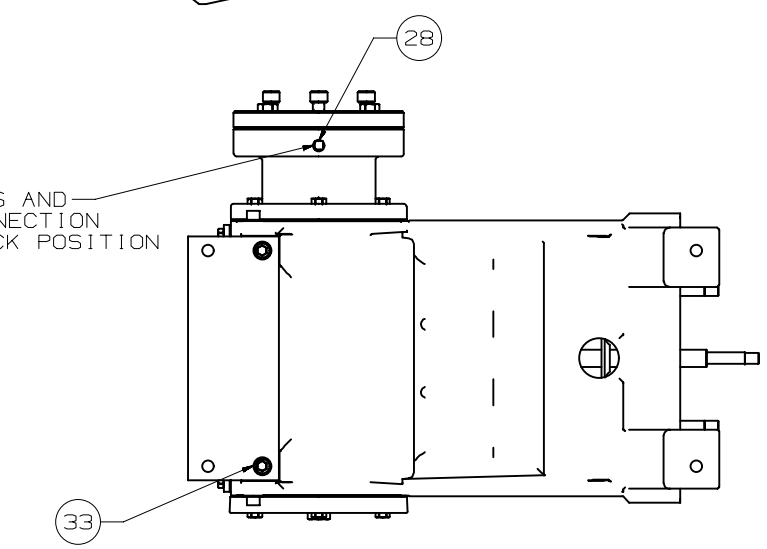

ITEM	DESCRIPTION	QTY
1	POWER FRAME:	1
2	CRANKSHAFT: F/L09	1
3	CONNECTING ROD:	3
4	SHELL BEARING	6
5	WRIST PIN:	3
6	CROSSHEAD ASSEMBLY	3
7	SEAL HOLDER:	3
8	SEAL: PONY ROD	9
9	BEARING HOUSING	1
10	BEARING HOUSING	1
11	O-RING: UNIFORM #160	2
12	SHIM	12
13	BACK COVER: F/L09 HD	1
14	GASKET: PUMP CASE COVER	1
15	OIL SEAL:	2
16	BEARING CONE	2
17	BEARING CUP	2
18	SET SCREW: 5/16 -18 X 1/2" LG SOC	6
19	ROD SEAL RETAINER	3
20	O-RING: UNIFORM #221	3
21	HHCS: 3/8 -16 X 1 1/4" LG	12
22	HEX HD CAPSCREW: 1/2-13 X .50 LG	1
23	ADAPTER: F/EATON 2K MOTOR	1
24	O-RING: UNIFORM #353	1
25	SPLINE ADAPTER: 12/24 22T X 12/24	1
26	CAPSCREW: HEX HD, 1/2-13UNC X 1-1/	4
27	CAPSCREW: HEX.SOC. 1/2-13 X 1 1/8"	4
28	PIPE PLUG: 1/4 NPT	2
29	PIPE PLUG: SQ HEAD, 1/2 NPT	2
30	OIL CAP:	1
31	PIPE PLUG: 1 1/4 NPT	1
32	REAR FOOT	1
33	CAPSCREW: HEX SOC. 1/2-13 X 3/4" L	2
34	BARRIER WASHER:	3
35	HEX HEAD CAP SCREW: 3/8-16UNC-2A X	16
36	PIPE PLUG: 1/4" NPT	1

PRIVATE AND CONFIDENTIAL

THIS DOCUMENT AND ALL THE INFORMATION CONTAINED HEREIN ARE THE CONFIDENTIAL AND EXCLUSIVE PROPERTY OF FMC TECHNOLOGIES AND MAY NOT BE REPRODUCED, USED, DISCLOSED, OR MADE PUBLIC IN ANY MANNER PRIOR TO EXPRESS WRITTEN AUTHORIZATION BY FMC TECHNOLOGIES. THIS DOCUMENT IS ACCEPTED PURSUANT TO AGREEMENT TO THE FOREGOING, AND MUST BE RETURNED UPON DEMAND.

MANUFACTURER AGREES THAT ARTICLES MADE IN ACCORDANCE WITH THIS DOCUMENT SHALL BE CONSIDERED FMC TECHNOLOGIES' DESIGN, AND THAT IDENTICAL ARTICLES OR PARTS THEREOF SHALL NOT BE MANUFACTURED FOR THE USE OR SALE BY MANUFACTURER OR ANY OTHER PERSON OR ENTITY WITHOUT PRIOR EXPRESS WRITTEN AUTHORIZATION BY FMC TECHNOLOGIES.

UNLESS OTHERWISE SPECIFIED

DO NOT SCALE THIS DRAWING
ALL DIMENSIONS ARE IN INCHES [MM]
BREAK SHARP EDGES .015 [.381] MAXIMUM
INSIDE CORNER RADII .030 [.762] MAXIMUM
THREADS CONFORM TO FEDERAL STANDARD H-28
TAPERED THREADS CONFORM TO API 6A
BOLT HOLES MUST STRADDLE COMMON CENTERLINE
FINISH 250 RMS
ALL DIA'S CONCENTRIC WITHIN .010 [.254] T.I.R.

TOLERANCE
.X -- ± .030 [.762]
.XX -- ± .015 [.381]
.XXX -- ± .005 [.127]
ANGLE -- ± 30'

DESCRIPTION
POWER END ASSEMBLY; L09
HD LH, W/EATON 2000
SERIES MOTOR
ADAPTER/BEARING HOUSING

DRAWN BY: KUNISHIGE, SCOTT	DATE: 22-JAN-2007	FMC Technologies	
DRAFTING CHECK: KUNISHIGE, SCOTT	DATE: 22-JAN-2007		
DESIGN REVIEW: LYON, TIM	DATE: 30-JAN-2007		
MANUFACTURING APPROVAL:	DATE:	LATEST ECN NO. 5017438	REV. B
APPROVED BY: GOODELL, GENE	DATE: 01-FEB-2007	DRAWING NUMBER 6700DU5005636	

COPYRIGHT FMC TECHNOLOGIES

PRINTED ON 02/01/2007 AT 17:29:37 STATUS: RELEASED FOR MANUFACTURE