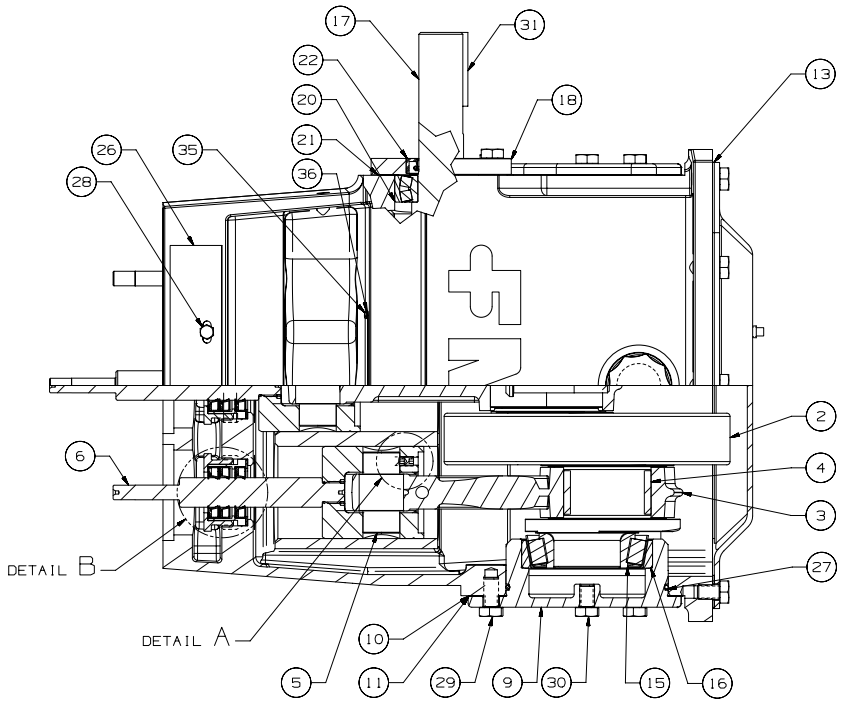

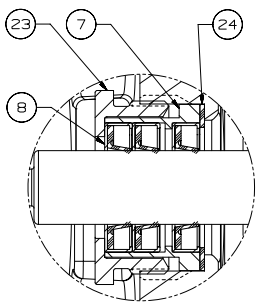

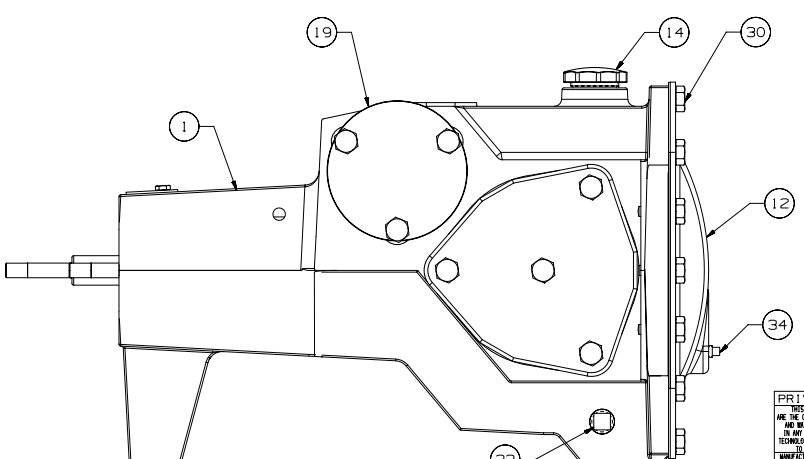

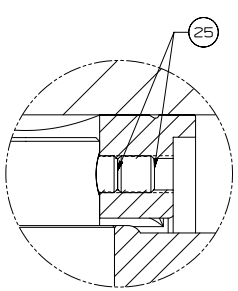

ITEM	DESCRIPTION	QTY
1	POWER FRAME:	1
2	CRANKSHAFT & GEAR ASSEMBLY:	1
3	CONNECTING ROD:	3
4	ROD BEARING:	6
5	WRIST PIN:	3
6	CROSSHEAD ASSEMBLY:	3
7	SEAL HOLDER:	3
8	OIL SEAL:AXIAL MOTION	9
9	BEARING HOUSING:L11	2
10	GASKET:BEARING HOUSING	2
11	SHIM:L11	6
12	BACK COVER:L11	1
13	GASKET:BACK COVER	1
14	OIL CAP:	1
15	BEARING CONE:	2
16	BEARING CUP:	2
17	PINION SHAFT:	1
18	PINION CAP:L11	1
19	PINION BEARING CAP:	1
20	BEARING:SPHER ROLLER	2
21	GASKET PINION:	2
22	OIL SEAL: PINION	1
23	PACKING NUT: WIPER SEAL	3
24	GASKET: PACKING NUT	3
25	SET SCREW: SOC HEAD, KNURLED, 5/16	6
26	INSPECTION PLATE:	1
27	O-RING: UNIFORM #252	2
28	CAP SCREW: HEX HEAD, 1/4 X .50 LG	2
29	CAP SCREW: HEX HEAD, 1/2 X 1.00 LG	12
30	CAP SCREW: HEX HEAD, 1/2 X .75 LG	20
31	KEY: 3/8 SQUARE X 2.50 LG	1
32	PIPE PLUG: 1-1/4 NPT (NOT SHOWN)	1
33	PIPE PLUG: SQ HEAD, 1/2 NPT	2
34	PIPE PLUG: SQ HEAD, 1/8 NPT	1
35	SELF TAPPING SCREW:	2
36	NAMEPLATE:	1

PRIVATE AND CONFIDENTIAL
THIS DOCUMENT AND ALL THE INFORMATION CONTAINED HEREIN ARE THE CONFIDENTIAL AND EXCLUSIVE PROPERTY OF FMC TECHNOLOGIES AND MAY NOT BE REPRODUCED, USED, DISCLOSED, OR MADE PUBLIC IN ANY MANNER PRIOR TO EXPRESS WRITTEN AUTHORIZATION BY FMC TECHNOLOGIES. THIS DOCUMENT IS ACCEPTED PURSUANT TO AGREEMENT TO THE FOREGOING, AND MUST BE RETURNED UPON DEMAND.
MANUFACTURER AGREES THAT ARTICLES MADE IN ACCORDANCE WITH THIS DOCUMENT SHALL BE CONSIDERED FMC TECHNOLOGIES' DESIGN, AND THAT IDENTICAL ARTICLES OR PARTS THEREOF SHALL NOT BE MANUFACTURED FOR THE USE OR SALE BY MANUFACTURER OR ANY OTHER PERSON OR ENTITY WITHOUT PRIOR EXPRESS WRITTEN AUTHORIZATION BY FMC TECHNOLOGIES.

UNLESS OTHERWISE SPECIFIED
DO NOT SCALE THIS DRAWING
ALL DIMENSIONS ARE IN INCHES [MM]
BREAK SHARP EDGES .015 [.381] MAXIMUM
INSIDE CORNER RADII .030 [.762] MAXIMUM
THREADS CONFORM TO FEDERAL STANDARD H-28
TAPERED THREADS CONFORM TO API 6A
BOLT HOLES MUST STRADDLE COMMON CENTERLINE
FINISH 250 RMS
ALL DIA'S CONCENTRIC WITHIN .010 [.254] T.I.R.

TOLERANCE
.X -- ± .030 [.762]
.XX -- ± .015 [.381]
.XXX -- ± .005 [.1271]
ANGLE -- ± 30'

DESCRIPTION
POWER END ASSEMBLY; L11 LH

DRAWN BY: STILES, MICHAEL	DATE: 16-OCT-2007	FMC Technologies
DRAFTING CHECK: LOUDERMILK, STEVE	DATE: 06-NOV-2007	
DESIGN REVIEW: EVANS, AARON	DATE: 21-JAN-2008	
MANUFACTURING APPROVAL: CRUZ, GEORGE	DATE: 01-DEC-2007	LATEST ECN NO. 5019086 REV. A
APPROVED BY: SINGLETERRY, RONALD	DATE: 23-JAN-2008	DRAWING NUMBER DU500009546

COPYRIGHT FMC TECHNOLOGIES

** RELEASED FOR MANUFACTURE ** -- Published: 01/29/2008__14:48:00