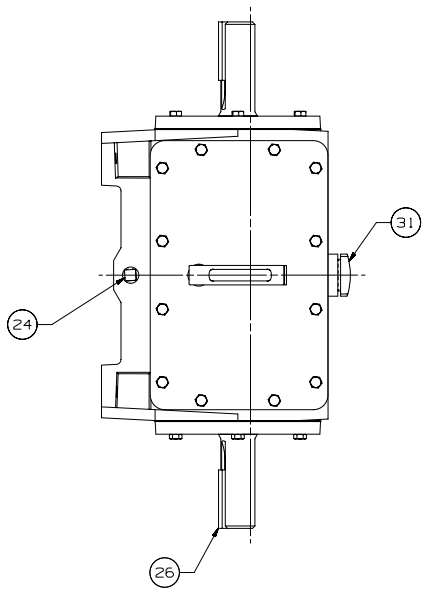

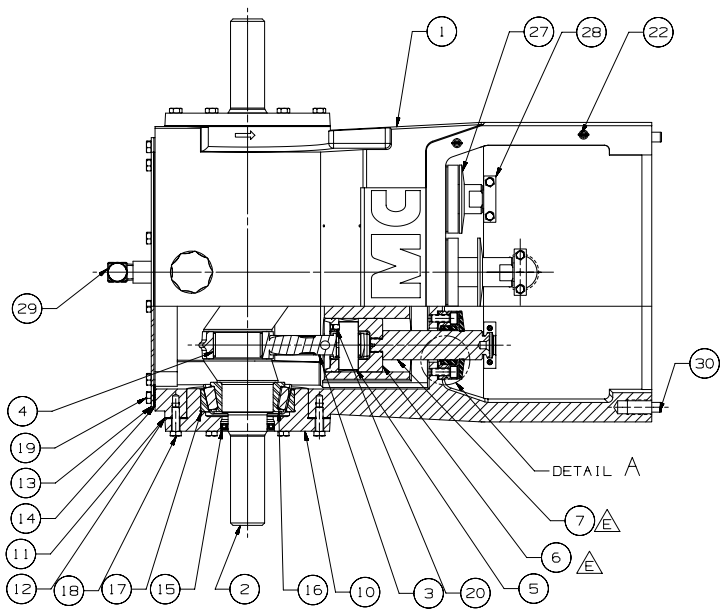

ITEM	DESCRIPTION	QTY
1	POWER FRAME:	1
2	CRANKSHAFT:	1
3	CONNECTING ROD:	3
4	SHELL BEARING	6
5	WRIST PIN:	3
6	CROSSHEAD:	3
7	PLUNGER ROD:	3
8	SEAL HOLDER:	3
9	PONY ROD SEAL: BUSAK SYSTEM	6
10	BEARING HOUSING:	2
11	GASKET:	2
12	SHIM:	10
13	BACK COVER WELDMENT:	1
14	GASKET:	1
15	OIL SEAL:	2
16	BEARING CONE:	2
17	BEARING CUP:	2
18	HEX HEAD CAPSCREW: 3/8-16UNC X 1.25 LG	12
19	HEX HEAD CAP SCREW: 3/8-16UNC-2A X .75 LG	12
20	SET SCREW: 1/4-20UNC-2A X .50 LG	3
21	CAPSCREW: SOC HD, 3/8 X 1.00 LG	6
22	THUMB SCREW: 1/4-20UNC-2A X .50 LG	4
23	PIPE PLUG: SQ HD 1/2 NPT (N.S.)	1
24	PIPE PLUG: SQ HEAD, 1/2 NPT	1
25	PIPE PLUG: 1 1/4 NPT (N.S.)	1
26	KEY: 3/8 SQ X 3.00 LG	1
27	SHIELD DEFLECTOR:	3
28	PLUNGER CLAMP ASSEMBLY:	3
29	LIQUID LEVEL GAGE:	1
30	DOWEL PIN: .500 DIA X 1.50 LG	2
31	OIL CAP:	1
32	GASKET: OIL SEAL HOLDER	3

ASSEMBLY NOTES:

A CROSSHEAD SLOT MUST BE FACING UPWARD.

B WRIST PIN LOCK HOLE MUST ALIGN WITH SET SCREW. APPLY LOCTITE 271 TO SET SCREWS BEFORE ASSEMBLY.

C LUBRICATE CRANKSHAFT OIL SEALS WITH LIGHT OIL ONLY.

D BEARING END PLAY TO BE .005 MAX LOOSE. GASKETS GO AGAINST POWER FRAME.

E ALL MOVING PARTS IN THE POWER END SHOULD BE LUBRICATED WITH SAE 30 WT OIL AT ASSEMBLY.

F INSTALL ROD SEALS WITH BOTH LIPS TURNED TOWARD THE THE CRANKCASE.

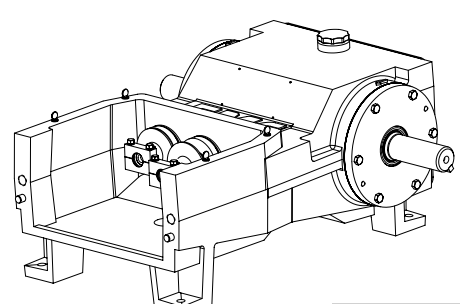

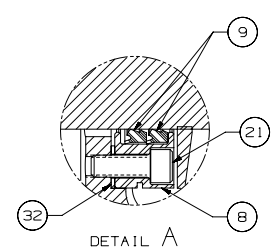

PRIVATE AND CONFIDENTIAL
THIS DOCUMENT AND ALL THE INFORMATION CONTAINED HEREIN ARE THE CONFIDENTIAL AND EXCLUSIVE PROPERTY OF FMC TECHNOLOGIES AND MAY NOT BE REPRODUCED, USED, DISCLOSED, OR MADE PUBLIC IN ANY MANNER PRIOR TO EXPRESS WRITTEN AUTHORIZATION BY FMC TECHNOLOGIES. THIS DOCUMENT IS ACCEPTED PURSUANT TO AGREEMENT TO THE FOREGOING, AND MUST BE RETURNED UPON DEMAND.
MANUFACTURER AGREES THAT ARTICLES MADE IN ACCORDANCE WITH THIS DOCUMENT SHALL BE CONSIDERED FMC TECHNOLOGIES' DESIGN, AND THAT IDENTICAL ARTICLES OR PARTS THEREOF SHALL NOT BE MANUFACTURED FOR THE USE OR SALE BY MANUFACTURER OR ANY OTHER PERSON OR ENTITY WITHOUT PRIOR EXPRESS WRITTEN AUTHORIZATION BY FMC TECHNOLOGIES.

UNLESS OTHERWISE SPECIFIED
DO NOT SCALE THIS DRAWING
ALL DIMENSIONS ARE IN INCHES [MM]
BREAK SHARP EDGES .015 [.381] MAXIMUM
INSIDE CORNER RADII [.030 [.762] MAXIMUM
THREADS CONFORM TO FEDERAL STANDARD H-28
TAPERED THREADS CONFORM TO API 6A
BOLT HOLES MUST STRADDLE COMMON CENTERLINE
FINISH 250 RMS
ALL DIA'S CONCENTRIC WITHIN .010 [.254] T.I.R.

TOLERANCE
.X -- ± .030 [.762]
.XX -- ± .015 [.381]
.XXX -- ± .005 [.127]
ANGLE -- ± 30'

DESCRIPTION
POWER END ASSEMBLY; M08
DBL EXT

DRAWN BY: GILDER, TOBY	DATE: 24-MAR-2007	FMC Technologies
DRAFTING CHECK: LOUDERMILK, STEVE	DATE: 02-AUG-2007	
DESIGN REVIEW: EVANS, AARON	DATE: 24-AUG-2007	
MANUFACTURING APPROVAL: CRUZ, GEORGE	DATE: 17-AUG-2007	LATEST ECN NO. 5017822 REV. E
APPROVED BY: LYON, TIM	DATE: 11-OCT-2007	DRAWING NUMBER 6700DU5009135

COPYRIGHT FMC TECHNOLOGIES

** RELEASED FOR MANUFACTURE ** -- Published: 10/16/2007__10:03:07