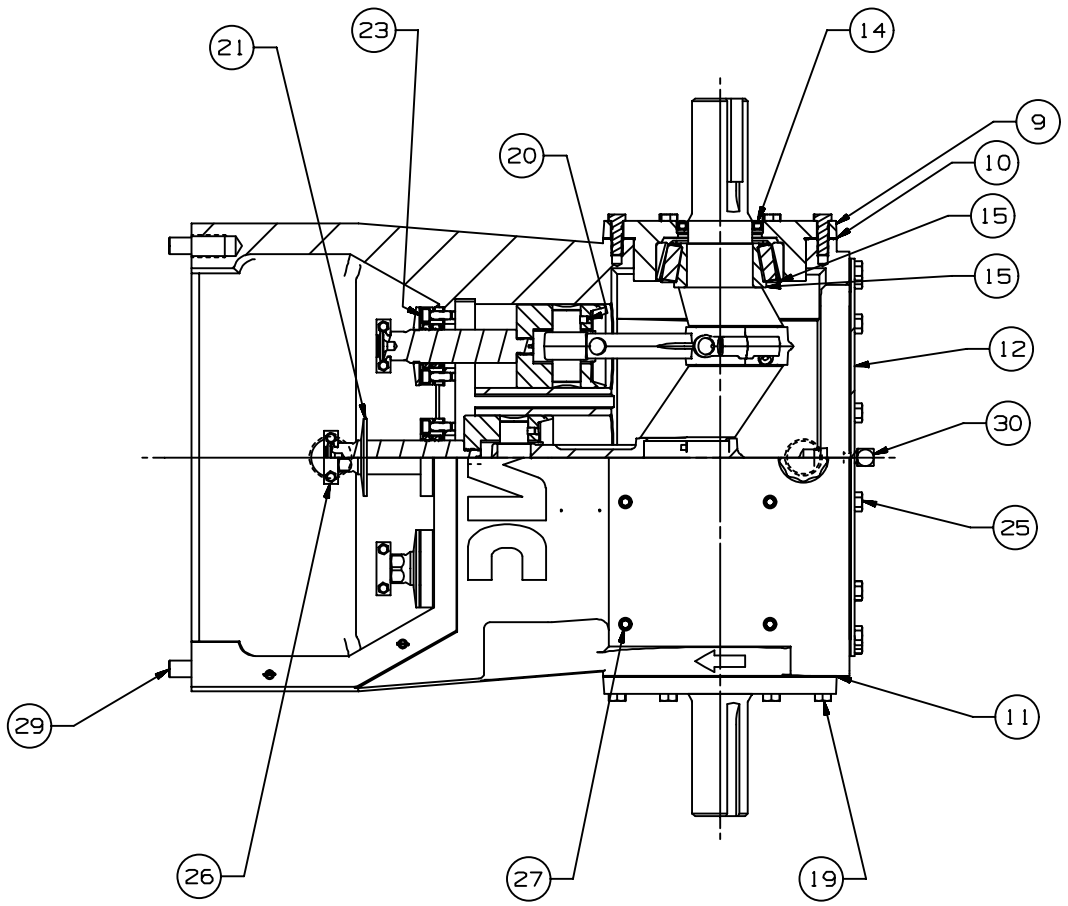

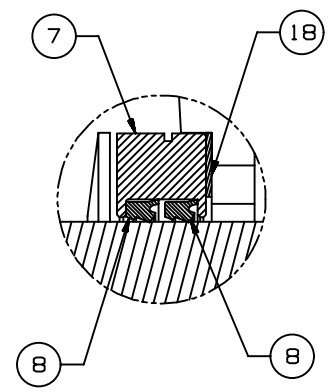

DETAIL B

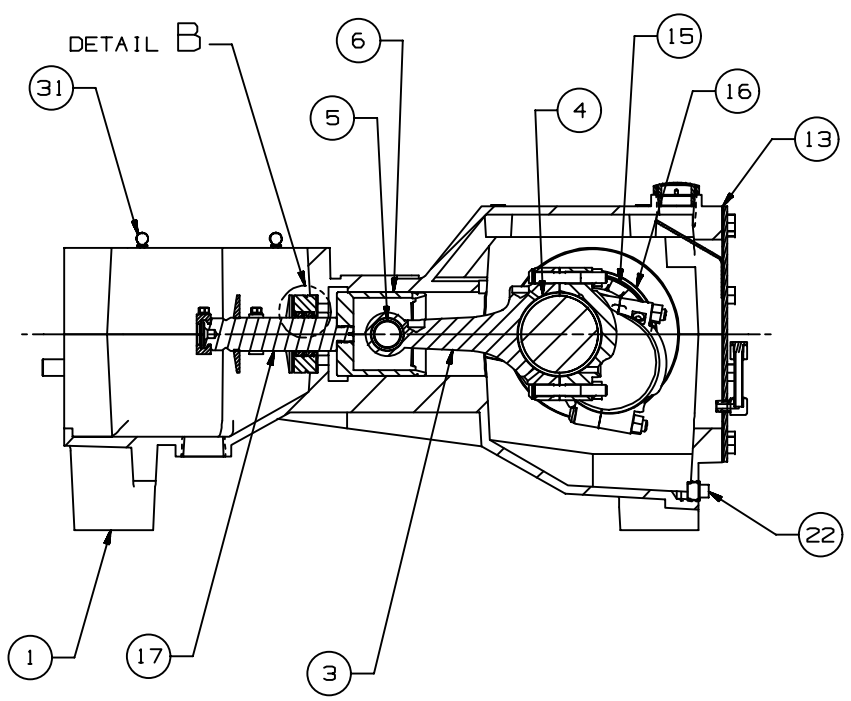

SECTION A - A

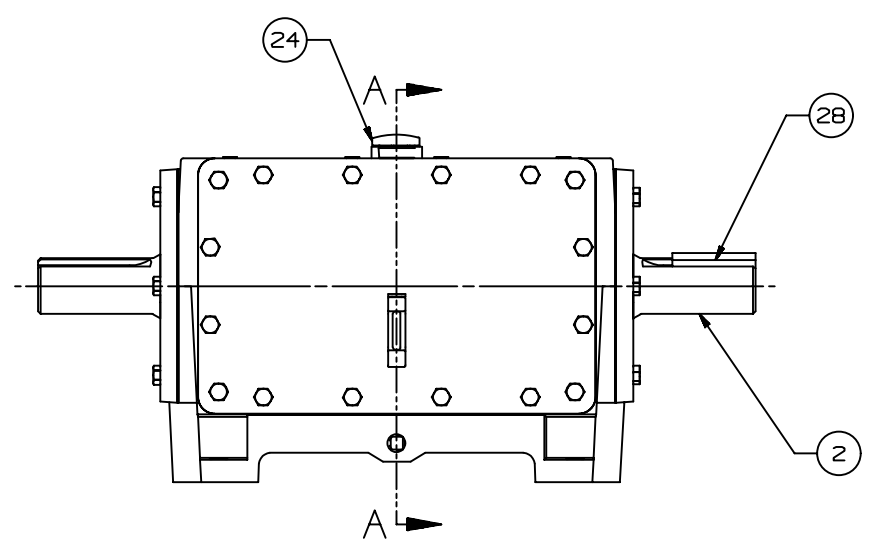

ITEM	DESCRIPTION	QTY
1	POWER FRAME:	1
2	CRANKSHAFT:	1
3	CONNECTING ROD:	3
4	ROD BEARING:	6
5	WRIST PIN:	3
6	CROSSHEAD: M12	3
7	SEAL HOLDER:	3
8	PONY ROD SEAL: BUSAK SYSTEM	6
9	BEARING HOUSING:	2
10	GASKET:	2
11	SHIM:	10
12	BACKCOVER WELDMENT:	1
13	COVER GASKET: F/M12	1
14	OIL SEAL:	2
15	BEARING CONE:	2
16	BEARING CUP:	2
17	PLUNGER ROD:	3
18	GASKET: OIL SEAL HOLDER	3
19	CAPSCREW: HEX HD, 1/2-13UNC X 1-1/2" LG	12
20	SET SCREW: 5/16 -18 X 1/2" LG SOC HD	3
21	SHIELD DEFLECTOR:	3
22	PIPE PLUG: SQ HEAD, 1/2 NPT	1
23	SOCKET HEAD CAPSCREW: 3/8-16UNC-2A X 1.	6
24	OIL CAP:	1
25	HHCS: 1/2-13 X 3/4 LG	16
26	PLUNGER CLAMP ASSEMBLY:	3
27	CAPLUG: 4	8
28	KEY: 5/8 SQ X 3.75 LG	1
29	DOWEL PIN:	2
30	LIQUID LEVEL GAGE:	1
31	THUMB SCREW: 1/4-20UNC-2A X .50 LG	4
32	THREAD PROTECTOR: CAPLUGS #T-9	1
33	PIPE PLUG: 1 1/4 NPT	1

NOTES:

1. APPLY LOCTITE 242 TO PLUNGER ROD THREAD BEFORE ASSEMBLING INTO CROSSHEAD AND TORQUE TO 150 FT-LB.
2. CROSSHEAD SLOT MUST BE FACING UPWARD.
3. WRIST PIN LOCK HOLE MUST ALIGN WITH SET SCREW. APPLY LOCTITE 271 TO SET SCREWS BEFORE ASSEMBLY.
4. LUBRICATE CRANKSHAFT OIL SEALS WITH LIGHT OIL ONLY.
5. BEARING END PLAY TO BE .002 TIGHT TO .002 MAX LOOSE. GASKETS GO AGAINST POWER FRAME.
6. ALL MOVING PARTS IN THE POWER END SHOULD BE LUBRICATED WITH SAE 30 WT OIL AT ASSEMBLY
7. TORQUE FASTENERS PER FMC ENGR SPEC AS-22
8. INSTALL ROD SEALS WITH BOTH LIPS TURNED TOWARD THE CRANKCASE

PRIVATE AND CONFIDENTIAL

THIS DOCUMENT AND ALL THE INFORMATION CONTAINED HEREIN ARE THE CONFIDENTIAL AND EXCLUSIVE PROPERTY OF FMC TECHNOLOGIES AND MAY NOT BE REPRODUCED, USED, DISCLOSED, OR MADE PUBLIC IN ANY MANNER PRIOR TO EXPRESS WRITTEN AUTHORIZATION BY FMC TECHNOLOGIES. THIS DOCUMENT IS ACCEPTED PURSUANT TO AGREEMENT TO THE FOREGOING, AND MUST BE RETURNED UPON DEMAND.

MANUFACTURER AGREES THAT ARTICLES MADE IN ACCORDANCE WITH THIS DOCUMENT SHALL BE CONSIDERED FMC TECHNOLOGIES' DESIGN, AND THAT IDENTICAL ARTICLES OR PARTS THEREOF SHALL NOT BE MANUFACTURED FOR THE USE OR SALE BY MANUFACTURER OR ANY OTHER PERSON OR ENTITY WITHOUT PRIOR EXPRESS WRITTEN AUTHORIZATION BY FMC TECHNOLOGIES.

UNLESS OTHERWISE SPECIFIED

DO NOT SCALE THIS DRAWING
ALL DIMENSIONS ARE IN INCHES [MM]
BREAK SHARP EDGES .015 [.38] MAXIMUM
INSIDE CORNER RADII .030 [.762] MAXIMUM
THREADS CONFORM TO FEDERAL STANDARD H-28
TAPERED THREADS CONFORM TO API 6A
BOLT HOLES MUST STRADDLE COMMON CENTERLINE
FINISH 250 RMS

TOLERANCE
.X -- ± .030 [.762]
.XX -- ± .015 [.381]
.XXX -- ± .005 [.127]
ANGLE -- ± 30'

DESCRIPTION
POWER END ASSEMBLY: M12 DBL EXT, W/ATTACHING COMPONENTS

		DATE
DRAWN BY	MORRIS, BRADLEY	04-OCT-2005
DRAFTING CHECK	MORRIS, BRADLEY	04-OCT-2005
DESIGN REVIEW	RICHARDS, KEITH T.	07-NOV-2005
MANUFACTURING APPROVAL	CHARLTON, FRED	12-OCT-2005
APPROVED BY	LYON, TIM	07-NOV-2005

FMC Technologies

LATEST ECN NO. 5014781 REV. C

DRAWING NUMBER 6700DU5010554

COPYRIGHT FMC TECHNOLOGIES